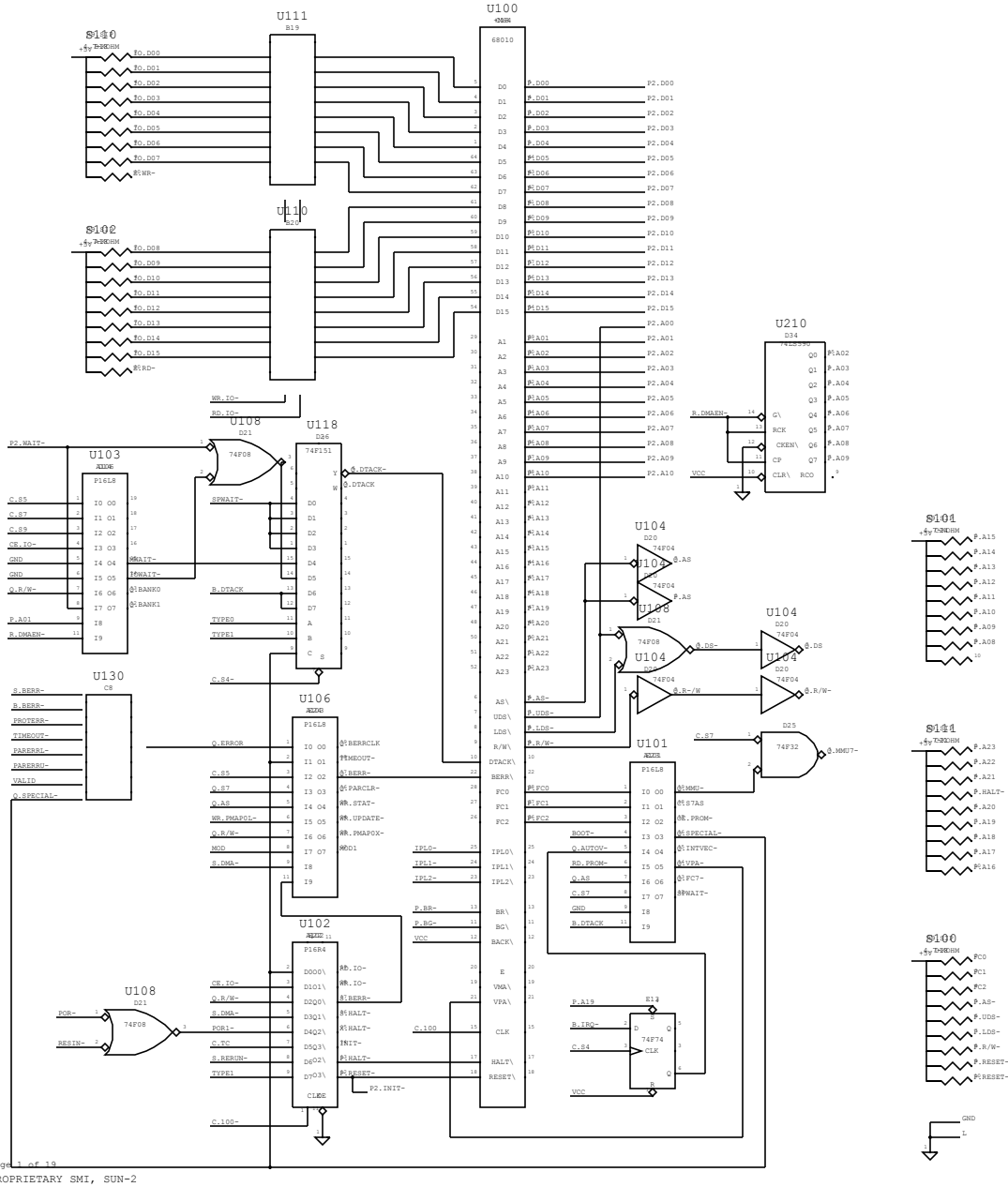

PROPRIETARY SMI, SUN-2

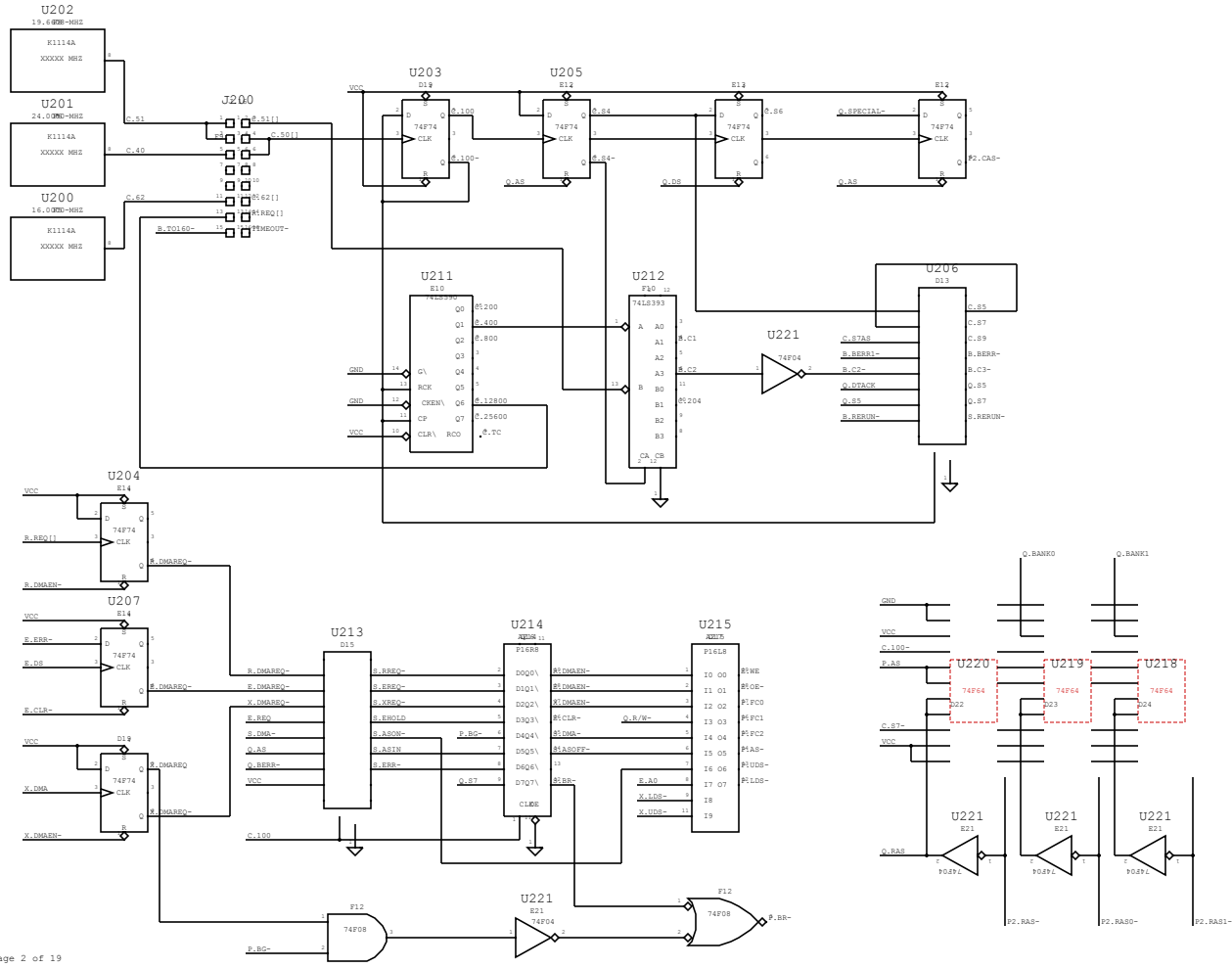

PROPRIETARY SMI, SUN-2, CLOCKS

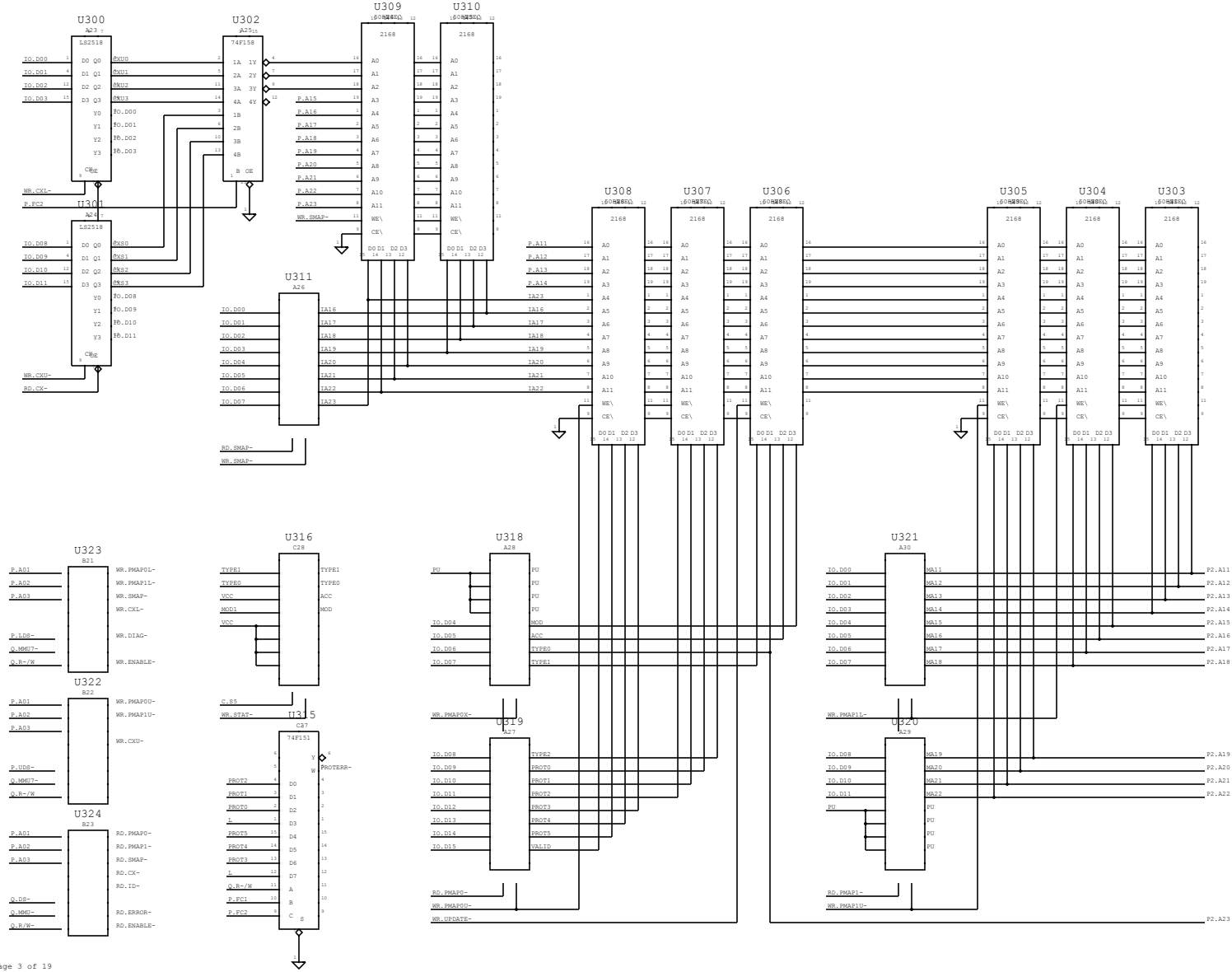

PROPRIETARY SMI, SUN-2

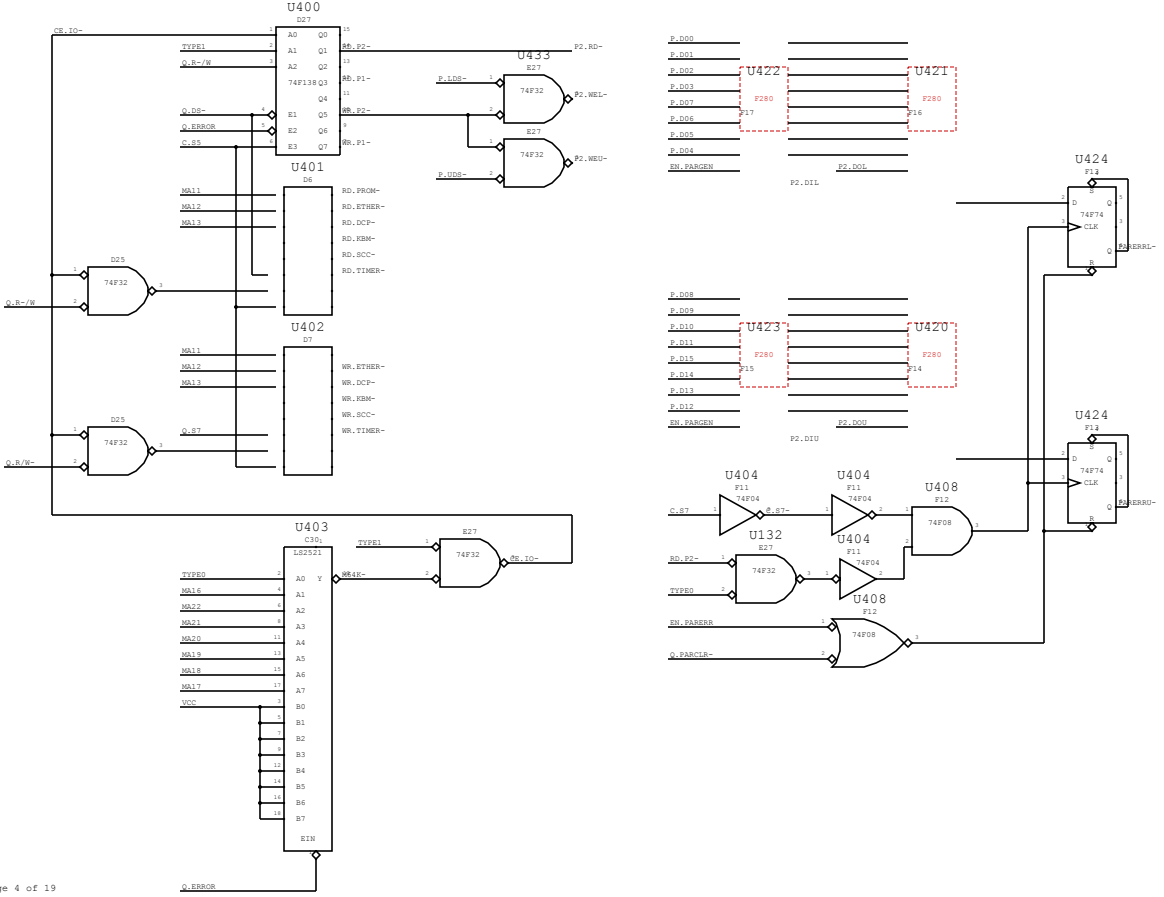

PROPRIETARY SMI, SUN-2

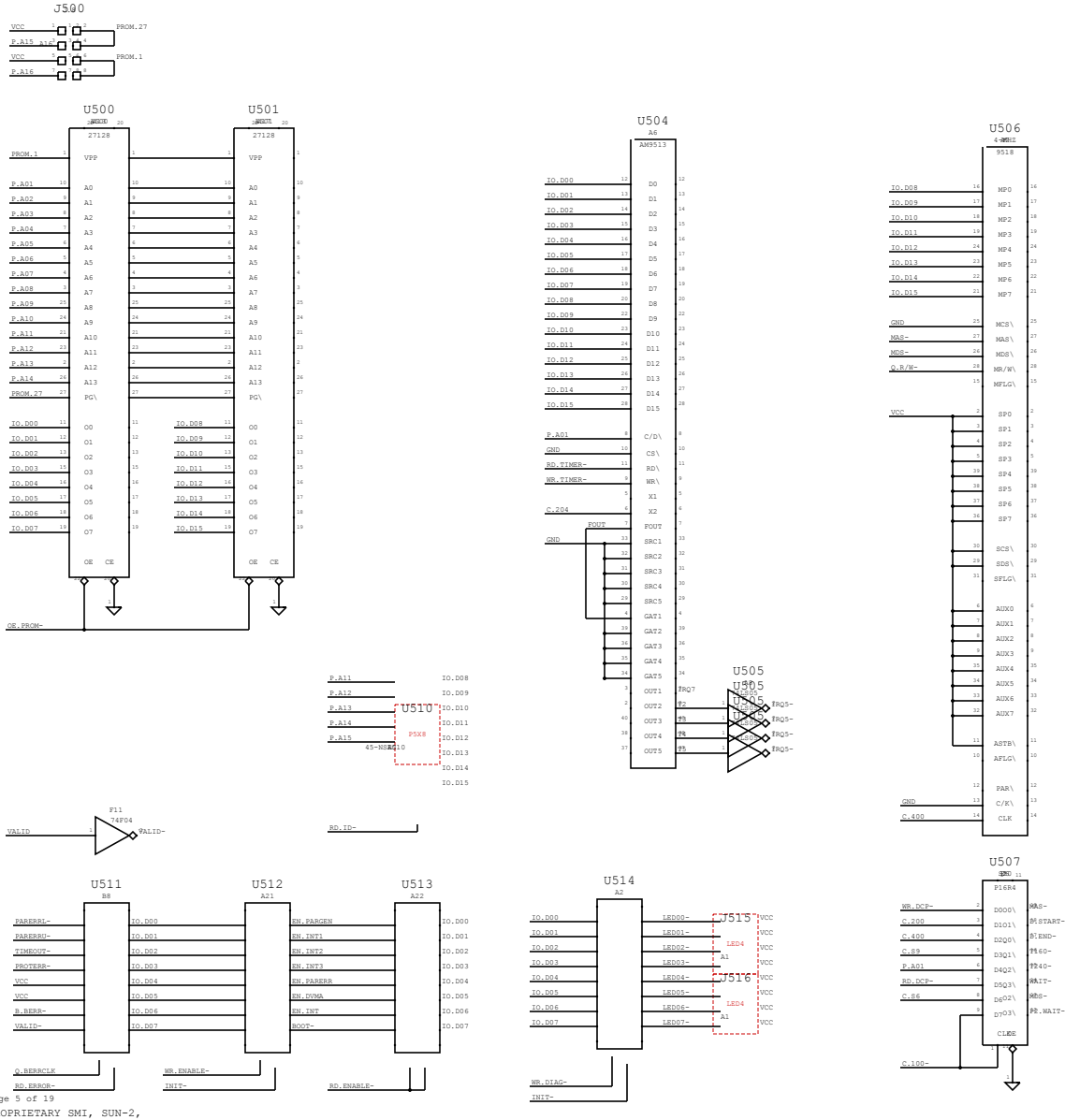

PROPRIETARY SMI, SUN-2,

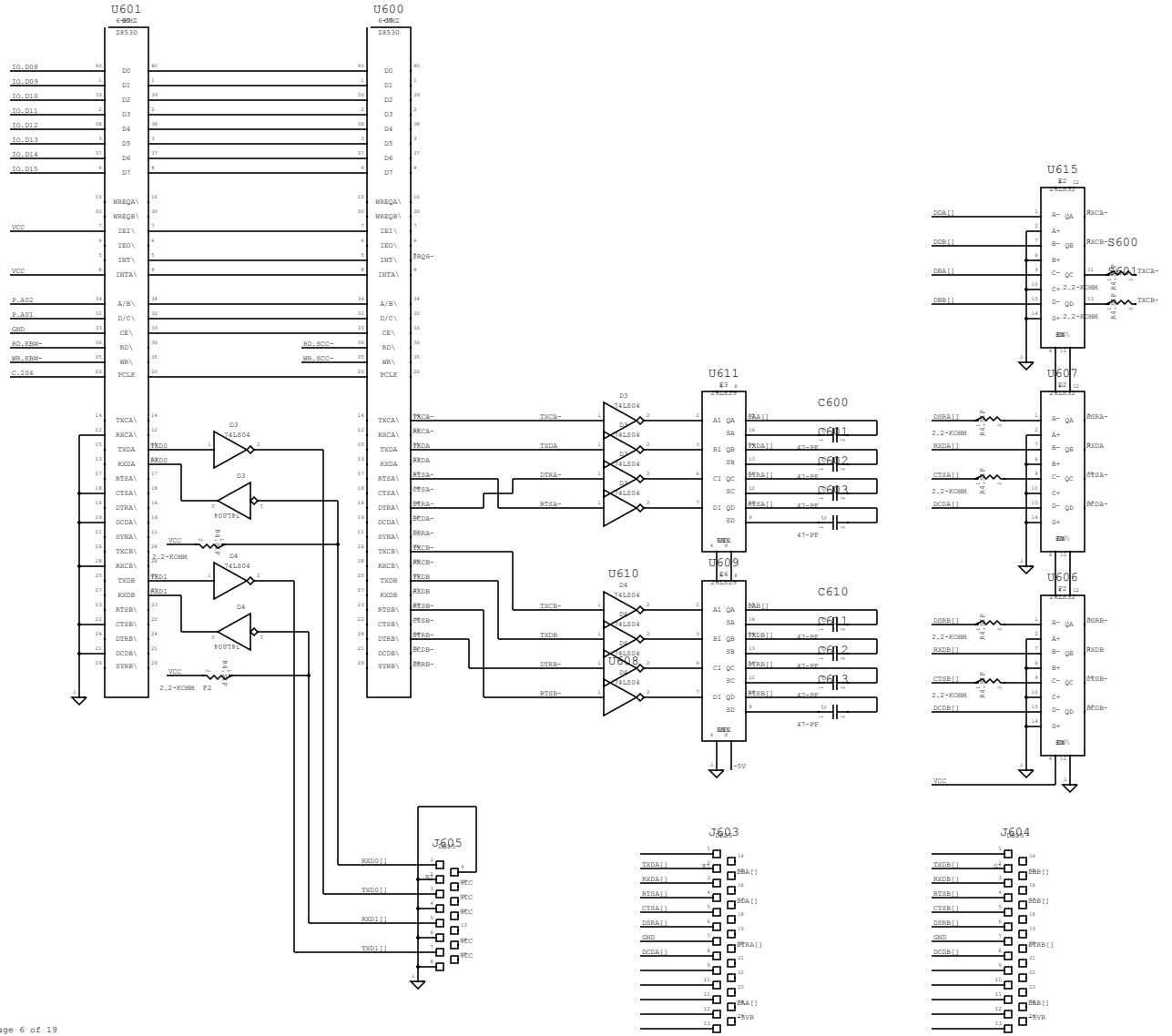

PROPRIETARY SMI, SUN-2, I/O — X

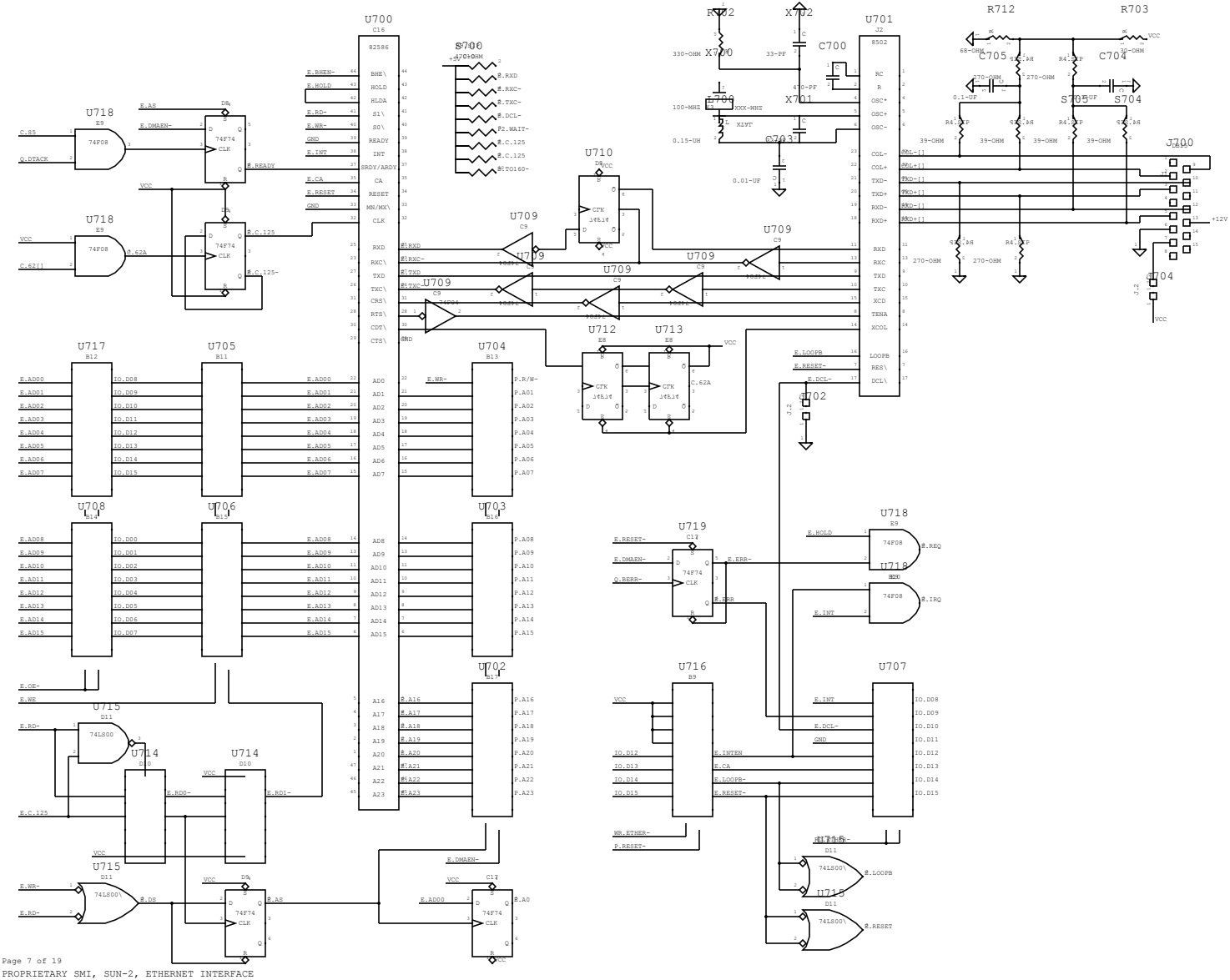

PROPRIETARY SMI, SUN-2, ETHERNET INTERFACE

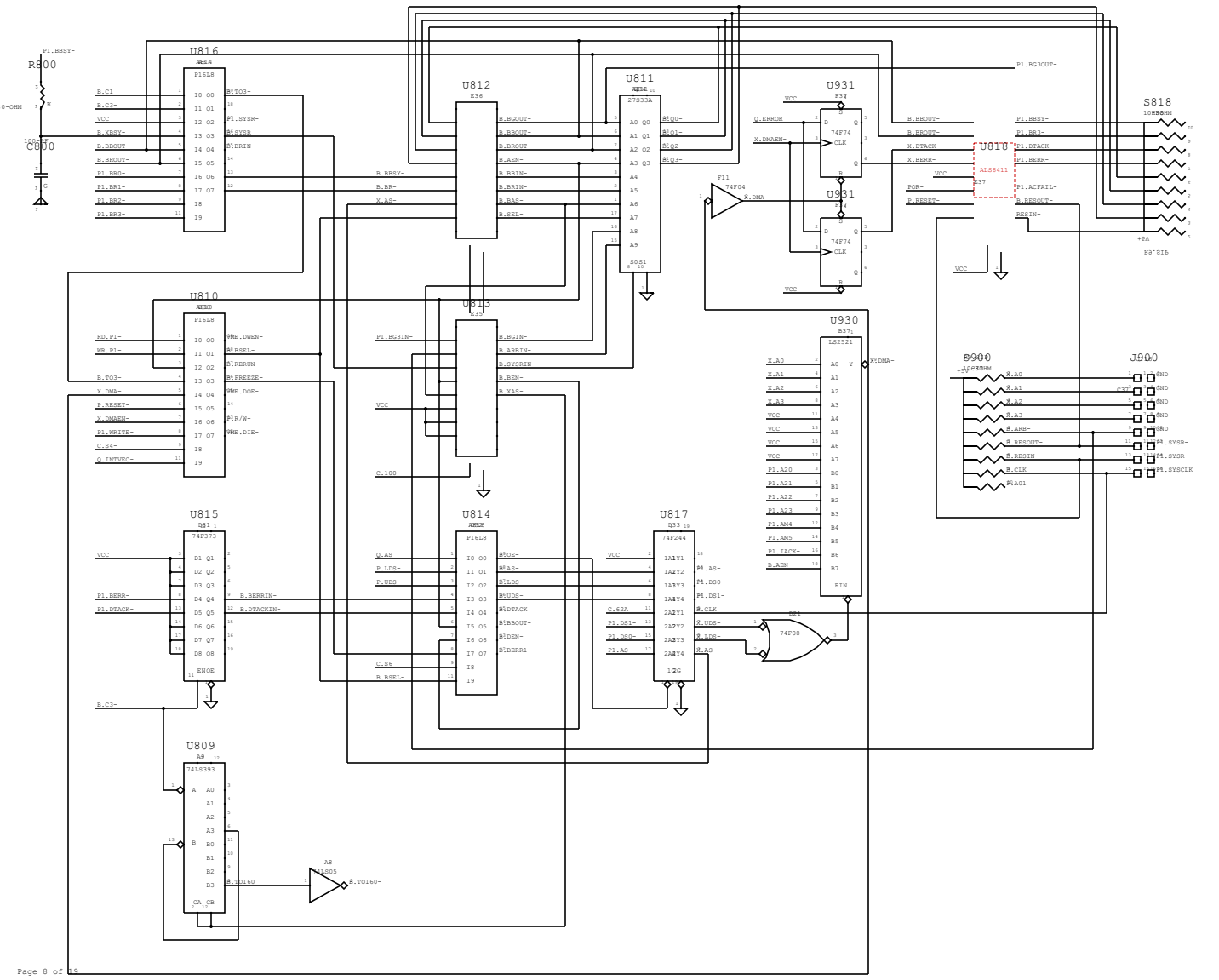

PROPRIETARY SMI, SUN-2

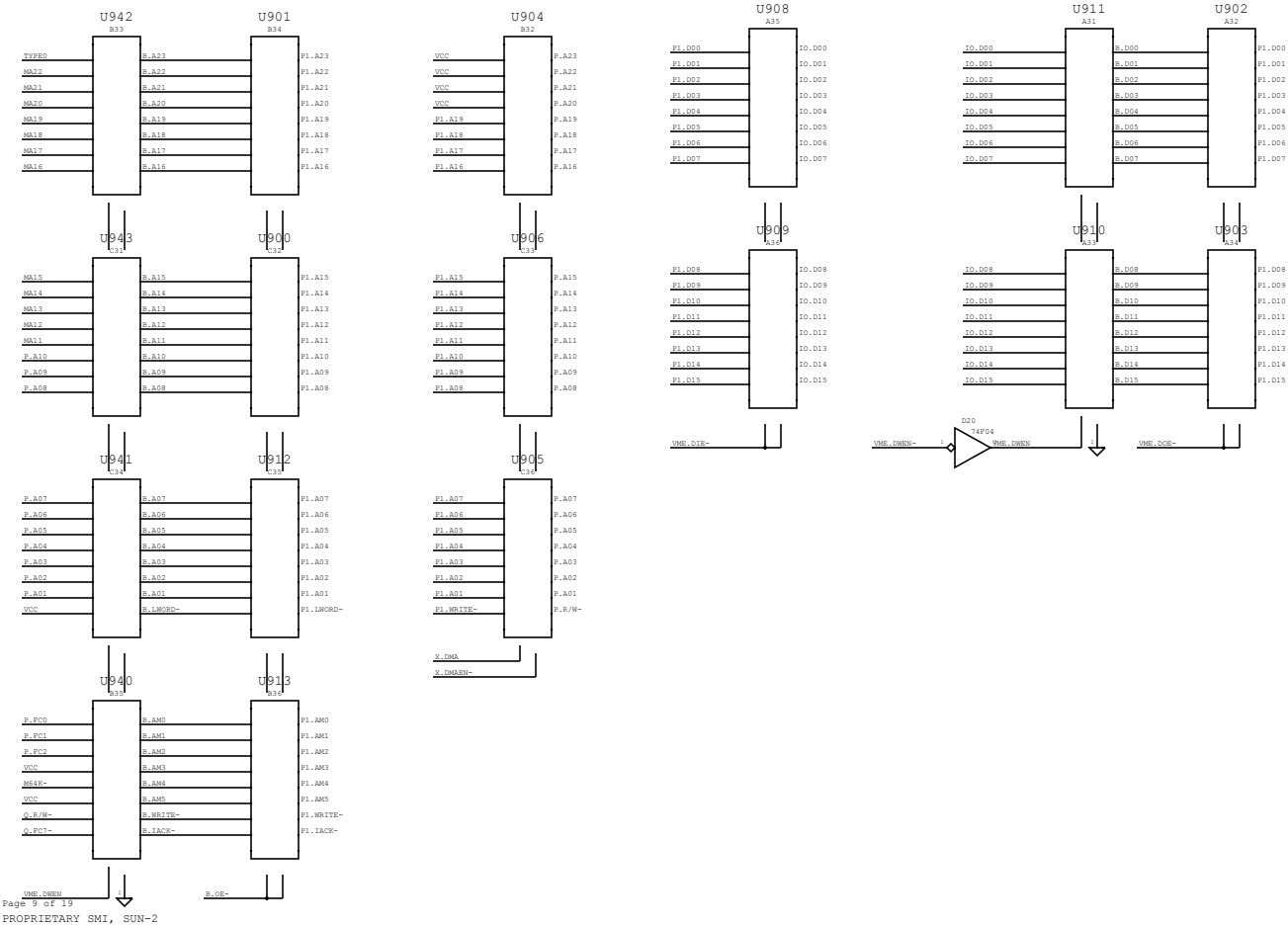

PROPRIETARY SMI, SUN-2

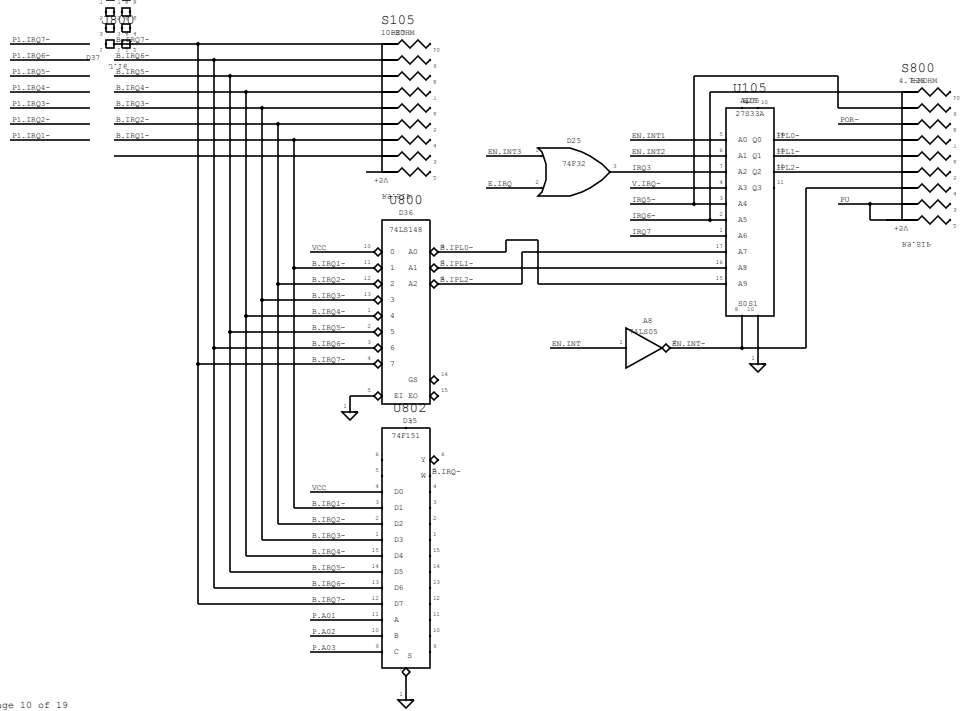

PROPRIETARY SMI, SUN-2

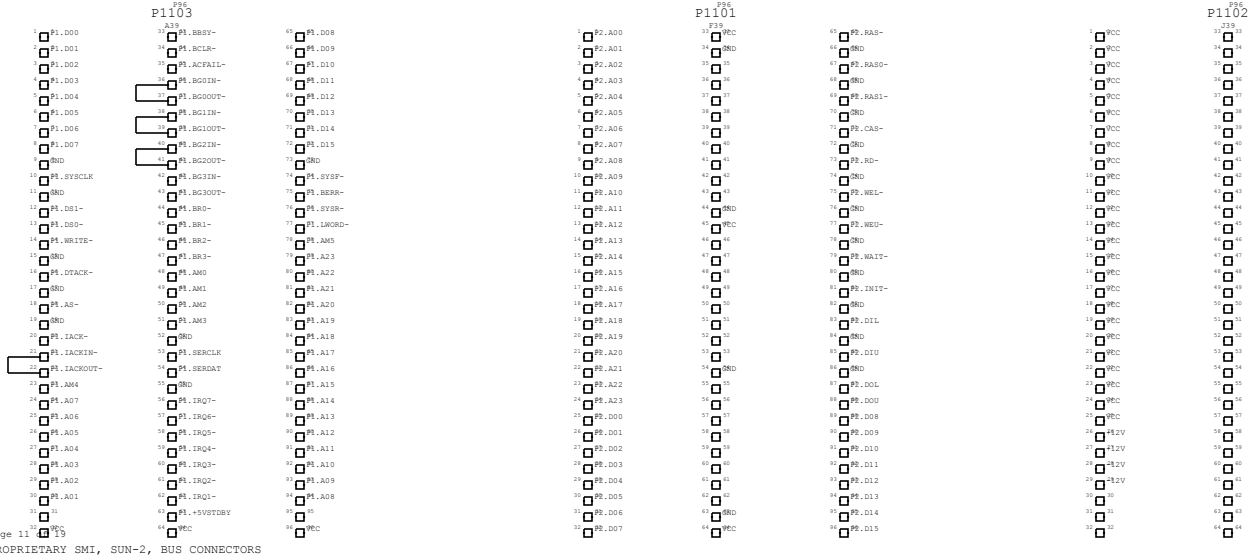

PROPRIETARY SMI, SUN-2, BUS CONNECTORS

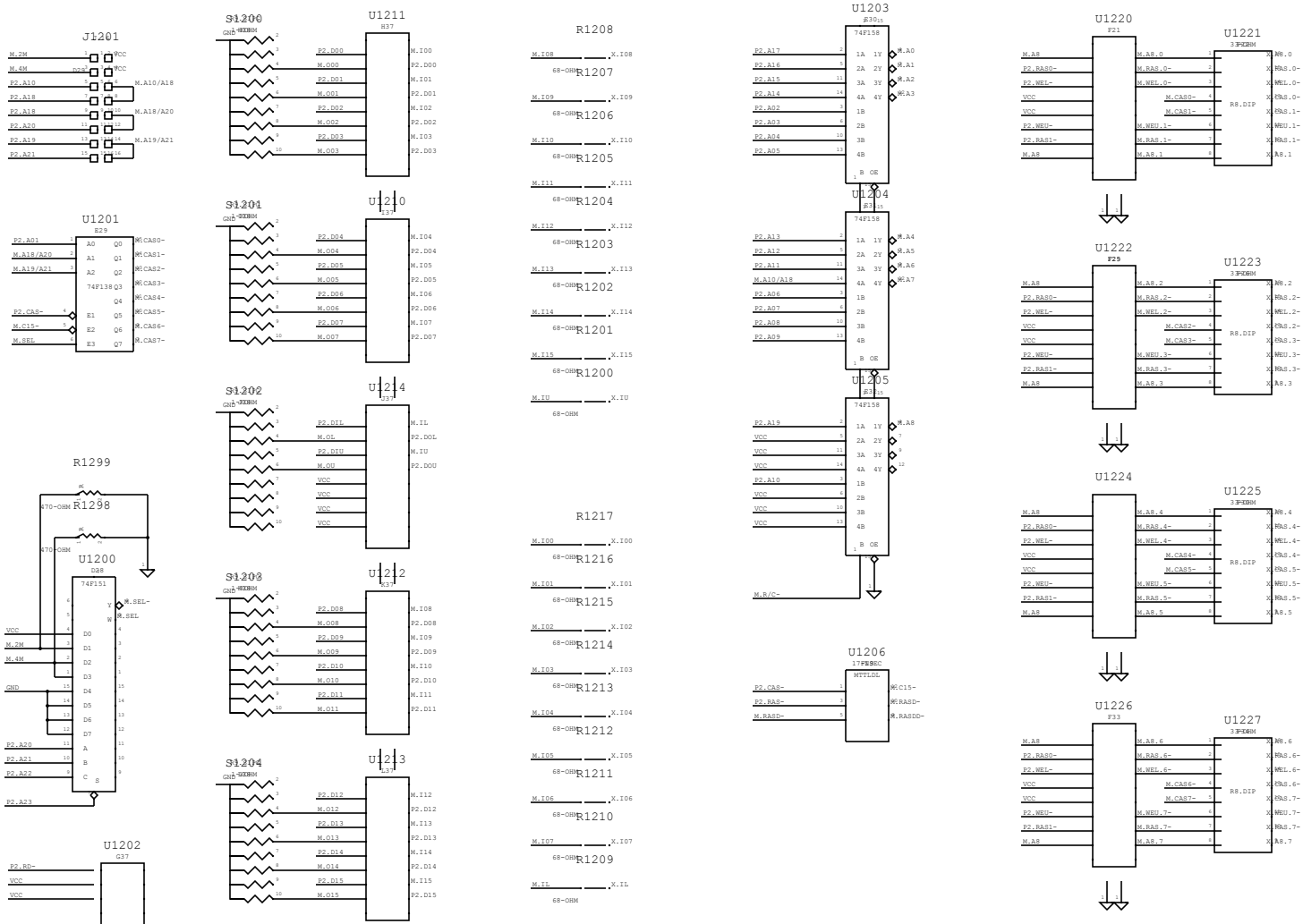

PROPRIETARY SMI, SUN-2, MEMORY INTERFACE

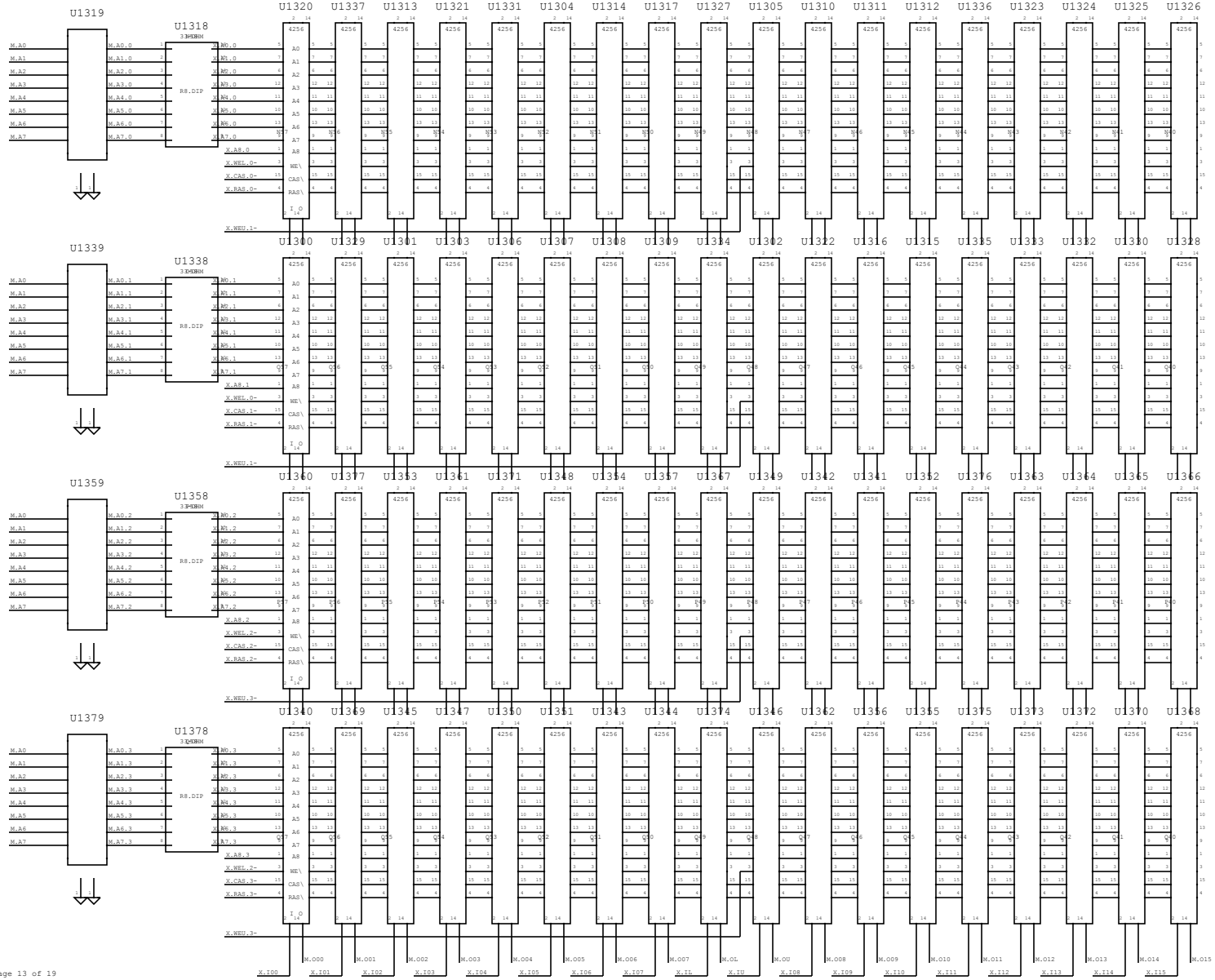

PROPRIETARY SMI, SUN-2, MEMORY

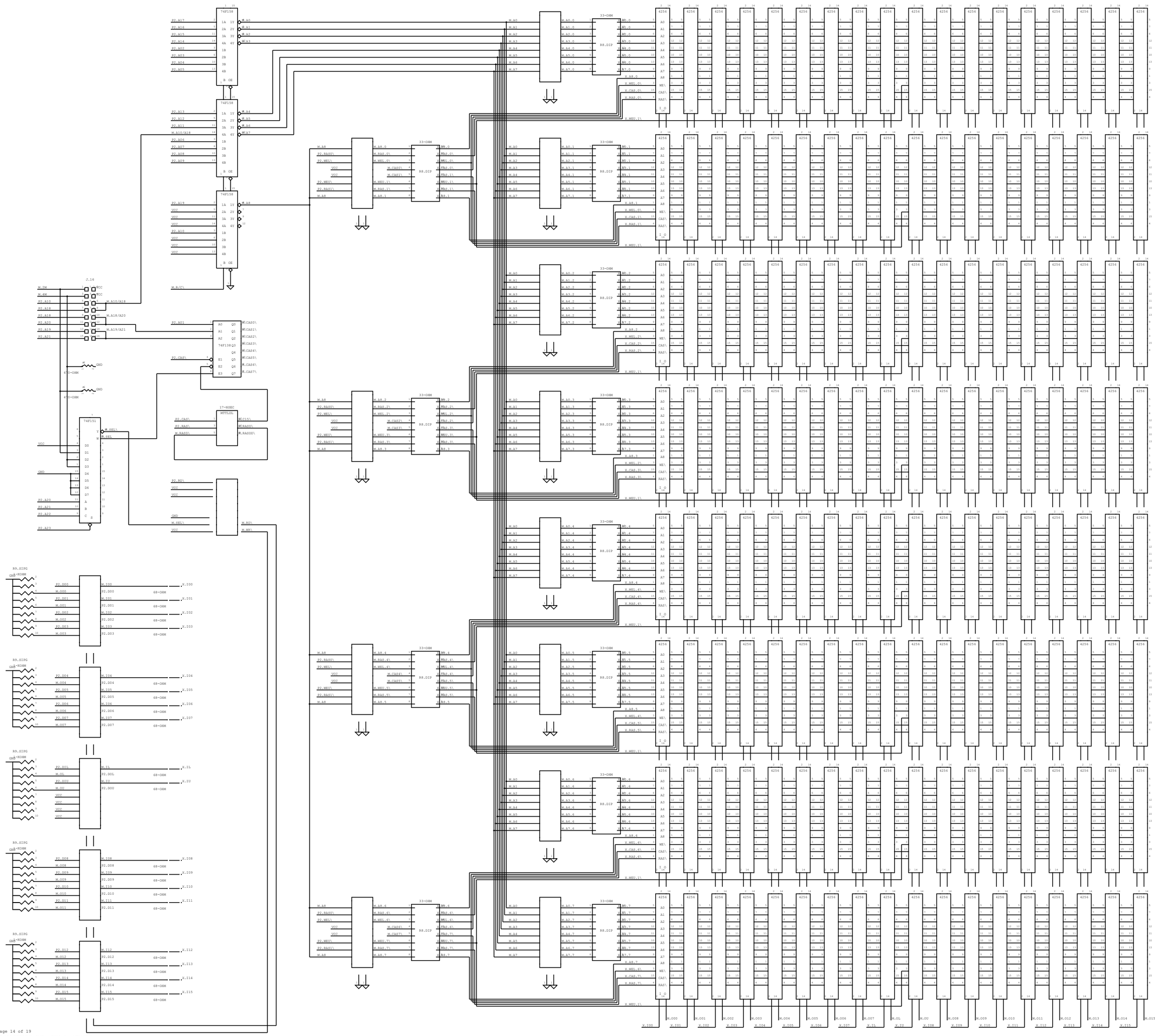

PROPRIETARY SMI, SUN-2, MEMORY

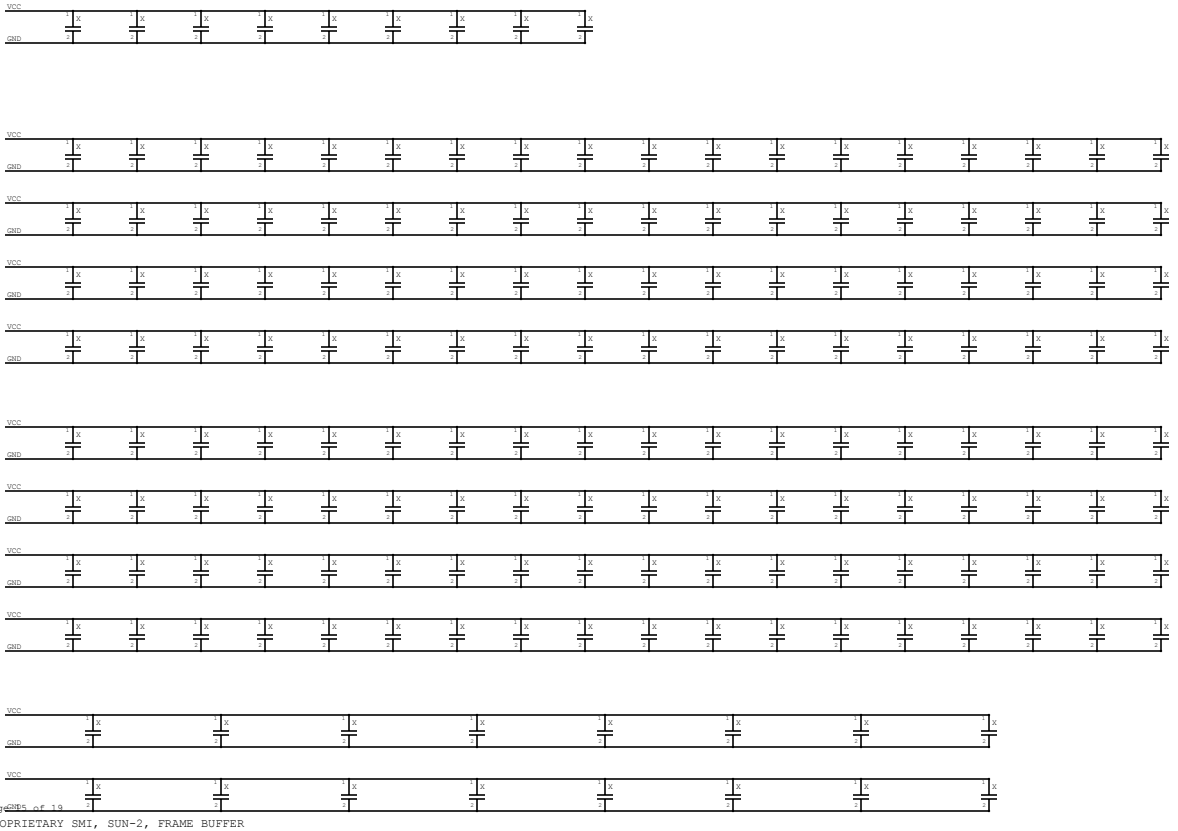

PROPRIETARY SMI, SUN-2, FRAME BUFFER

! VIDEO CONTROL REGISTER

! VIDEO DATA REGISTER

! VIDEO DATA MULTIPLEXOR

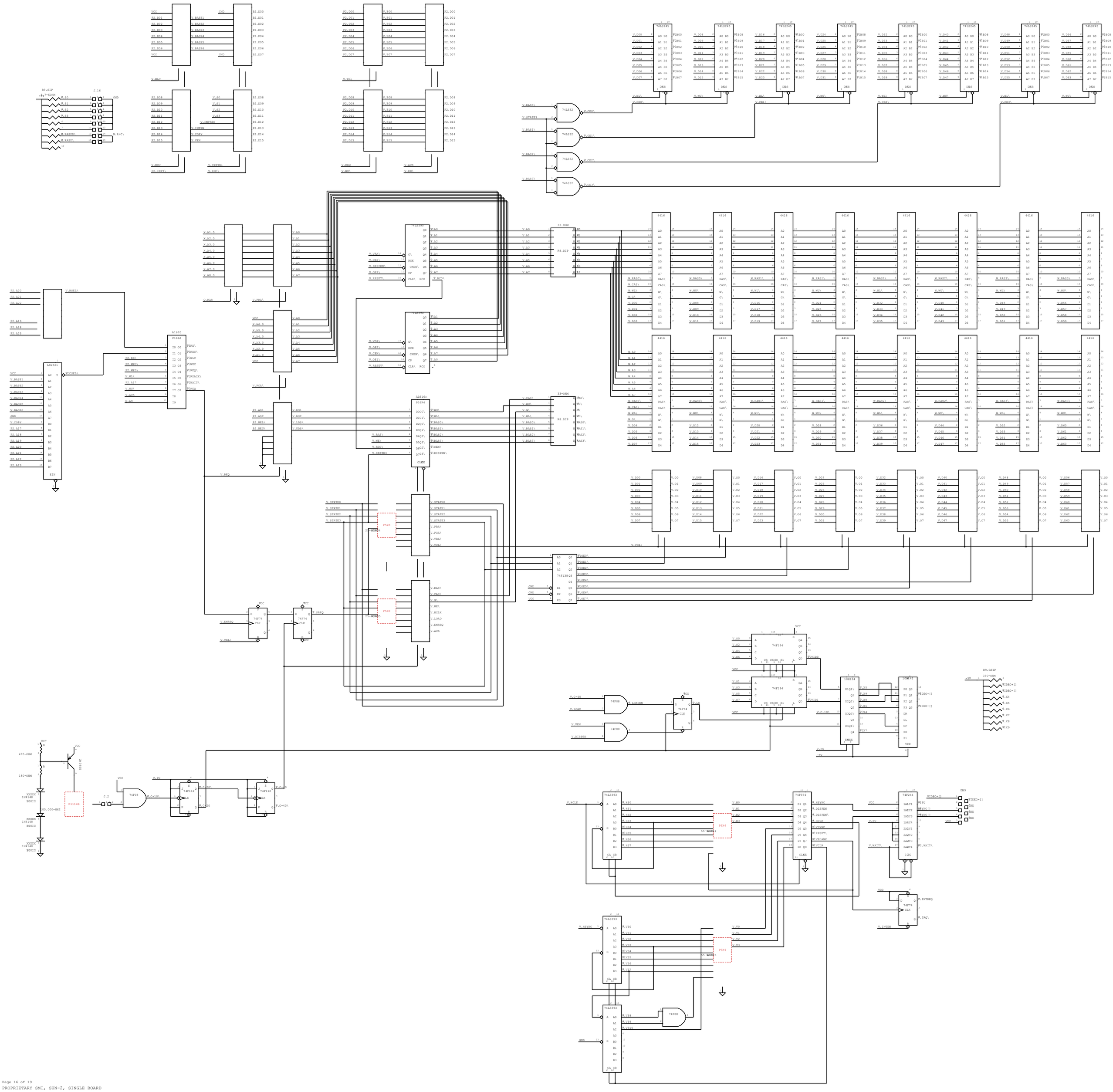

PROPRIETARY SMI, SUN-2, SINGLE BOARD

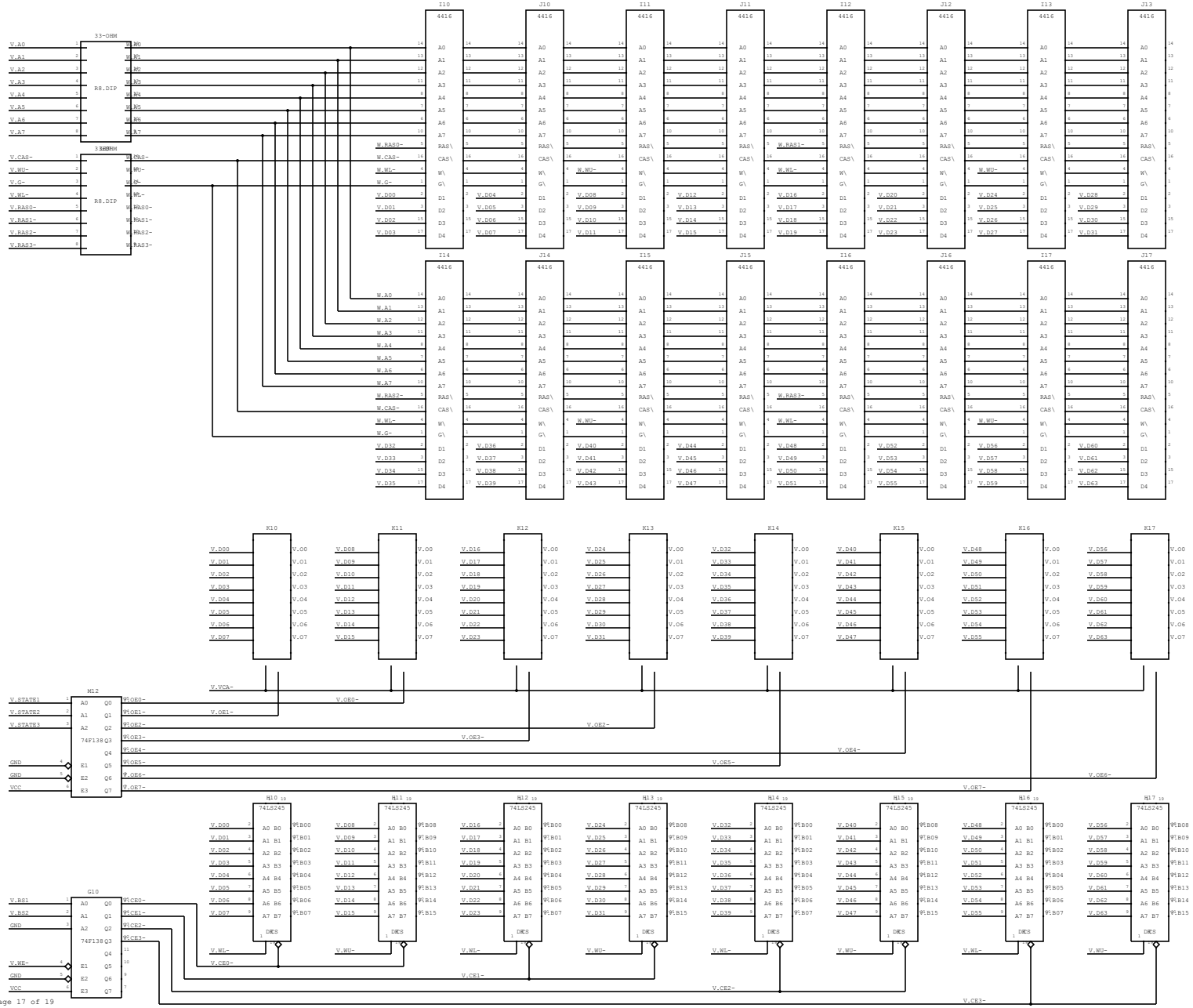

PROPRIETARY SMI, SUN-2, FRAME BUFFER

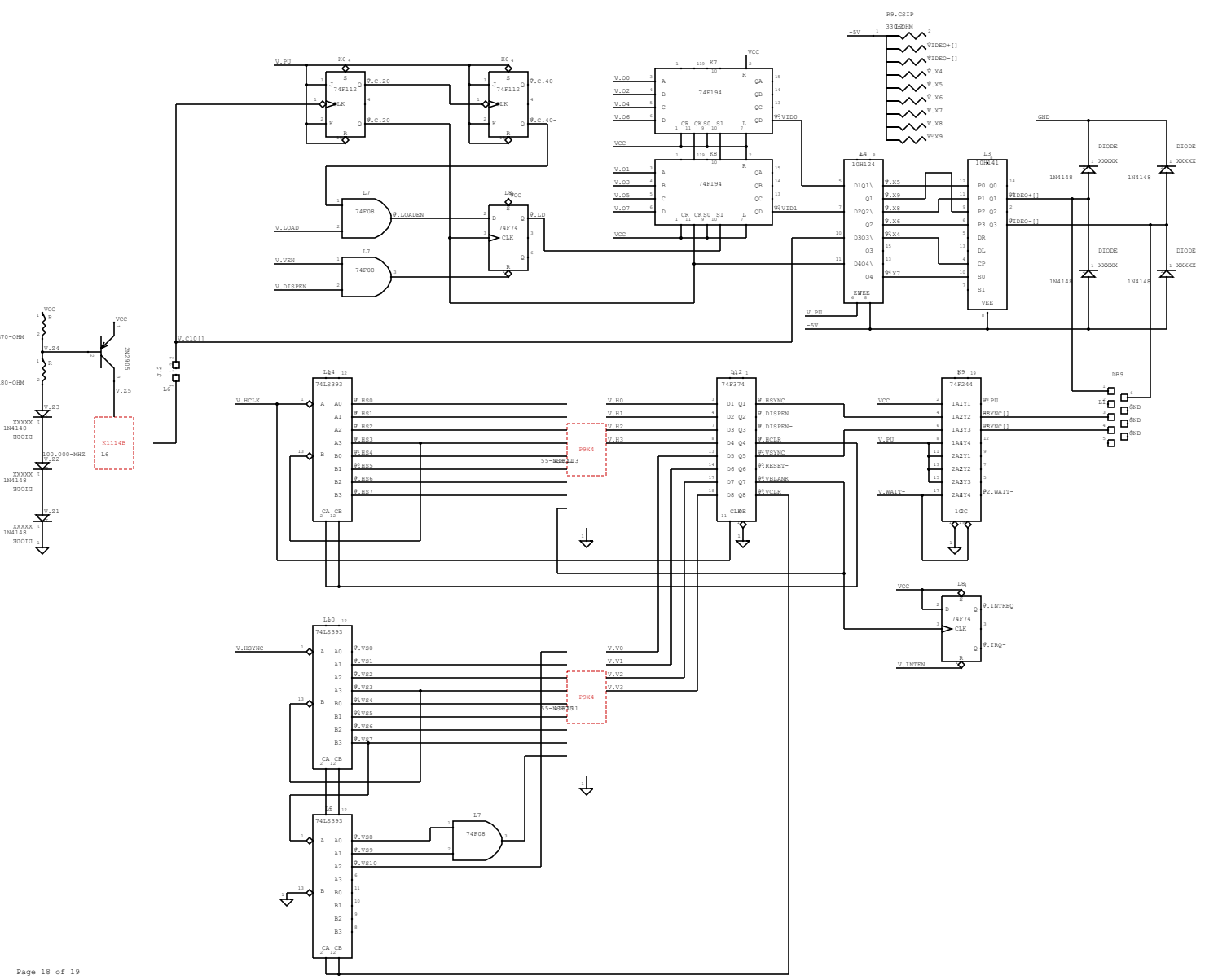

PROPRIETARY SMI, SUN-2, VIDEO CONTROLLER

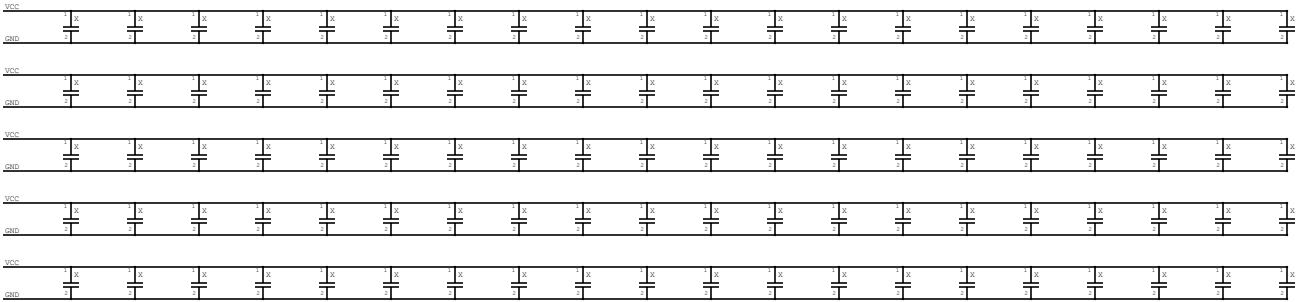

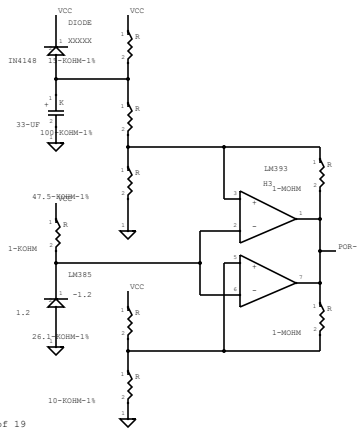

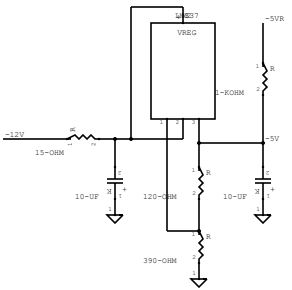

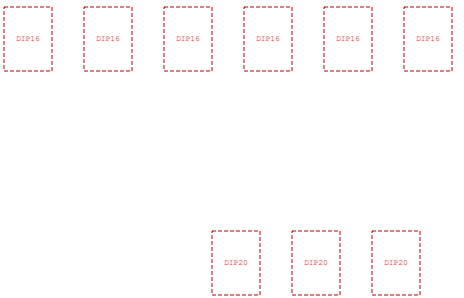

PROPRIETARY SMI, SUN-2, CAPS